Webstone

VALVE INNOVATION

HYDRO-CORE™



PATENTS PENDING

THE **CORE** OF ANY
PROFESSIONAL **HYDRONIC**
INSTALLATION

HYDRO-CORE™ MANIFOLD

Fully-Insulated Body



Webstone Isolator® with Rotating Flange & Drain



Precision-Crafted Closely Spaced Tees

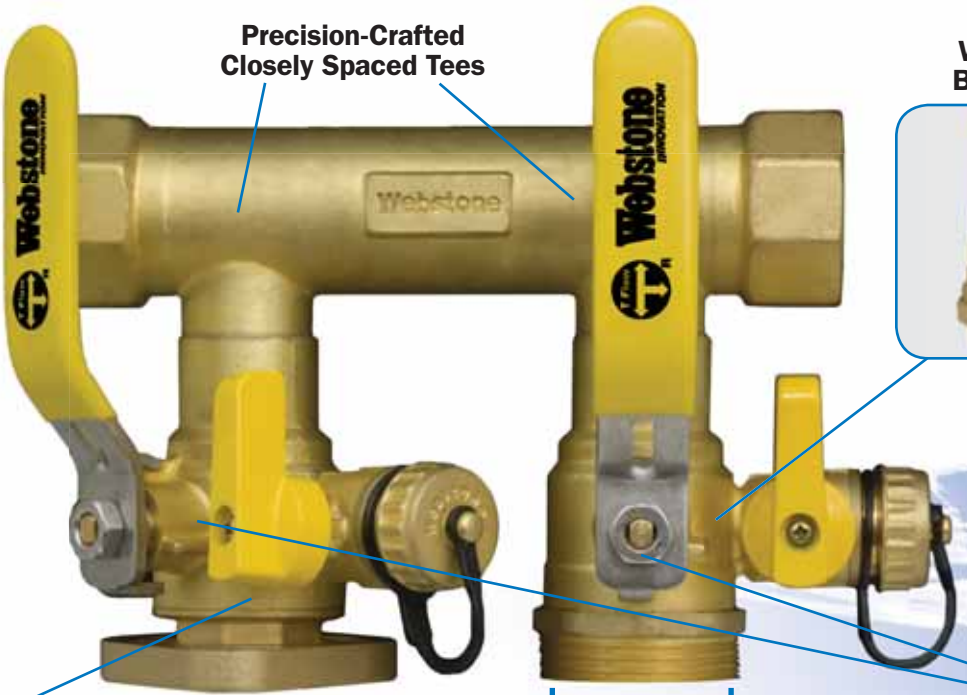

Webstone Ball Drain™



T-Flow Ball for Compact Design

T Flow R

Directs flow into either the boiler or purge drain.

HYDRO-CORE™ UNION CONNECTION

- Separate component, required for installation
- Three distinct styles to meet your needs



With 1/4" Plugged Pressure Gauge Port



Connection Only



With Multiple Device Ports

Plugged Connections for:

- *(2) 3/4" devices (Pressure Relief Valve, Low Water Cutoff)* OR
- *(1) 3/4" device & (1) 1/4" Pressure Gauge*

The Old Way

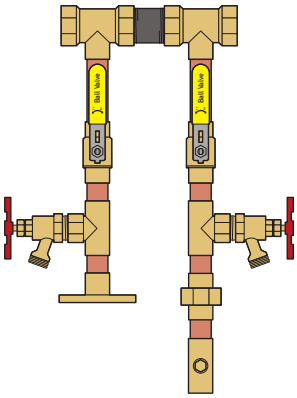

The Hydro-Core Way

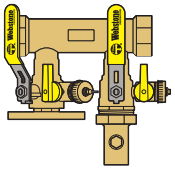

- Replaces 15 individual components
- Eliminates 13 connections
- Saves space
- Saves nearly 2 hrs. of labor

HYDRO-CORE™ MANIFOLD FLANGE OPTIONS



Flange Right



Flange Left



No Flange Double Ball Drain

For boilers w/ integral circulator pumps

HYDRO-CORE™ HYDRONIC APPLICATIONS

Near-Boiler Loops

- Complete Near Boiler Piping Kits available for select boiler models
- Components available for field fabricating numerous floor and wall hung boilers

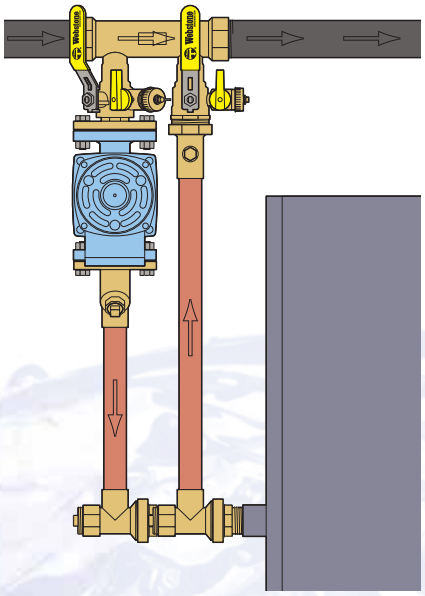

Secondary Circuit Loops

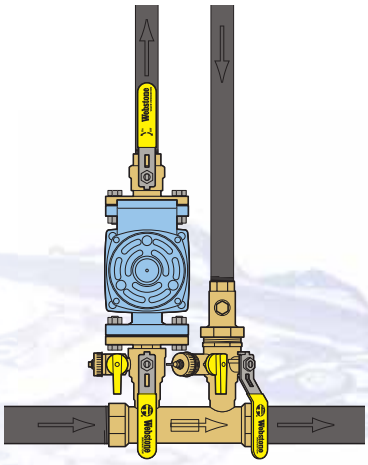

HYDRO-CORE™ ADVANTAGES

Precise Spacing for Hydraulic Separation

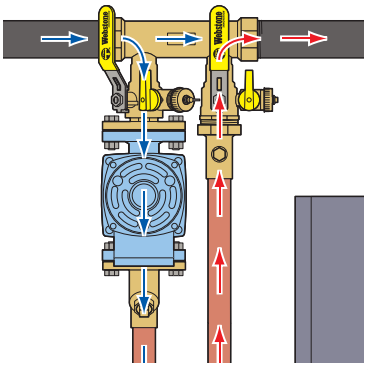

Simplifies Pump Isolation

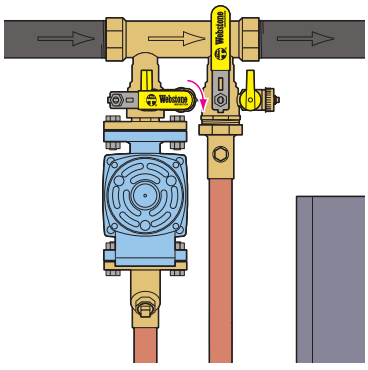

Simplifies System Purging

Through the Boiler

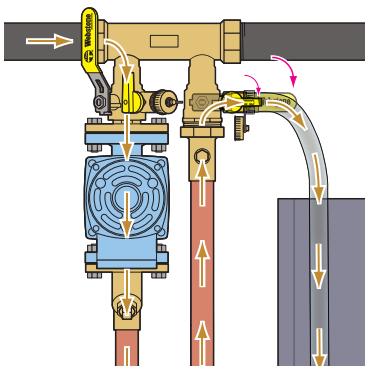

Outside the Boiler

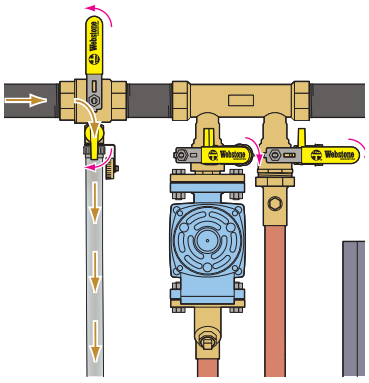

Easily Purge, Fill, or Descale* a Boiler or Secondary Hydronic Loop

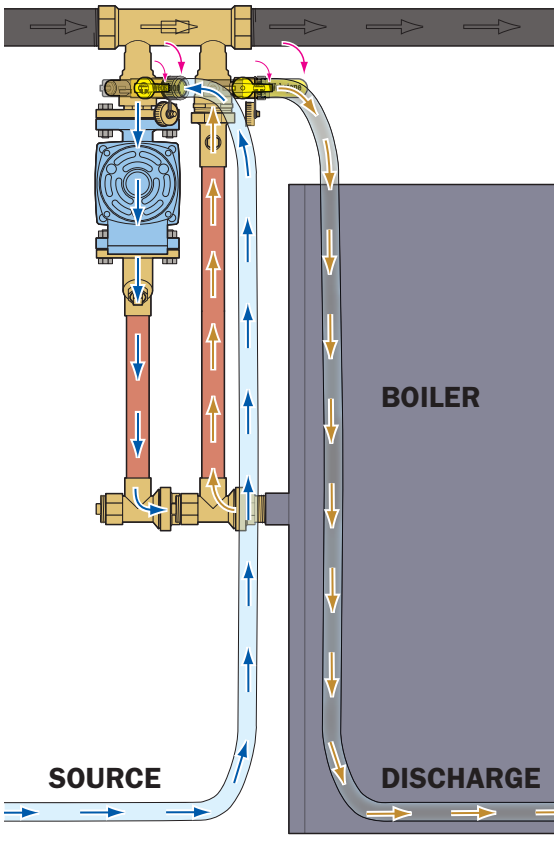

*Descaling may not be recommended for all boilers. Consult boiler manufacturer for details.

HYDRO-CORE™

APPLICATIONS

This revolutionary valve system streamlines the installation, performance and maintenance of a variety of boiler systems. *Hydo-Core is the core of any professional hydronic installation.*



Cast Iron/Conventional

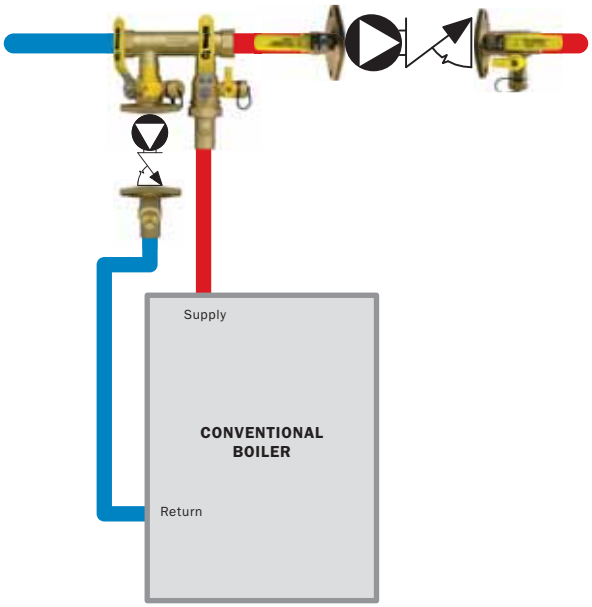

Near Boiler Mod/Con with Secondary Loop

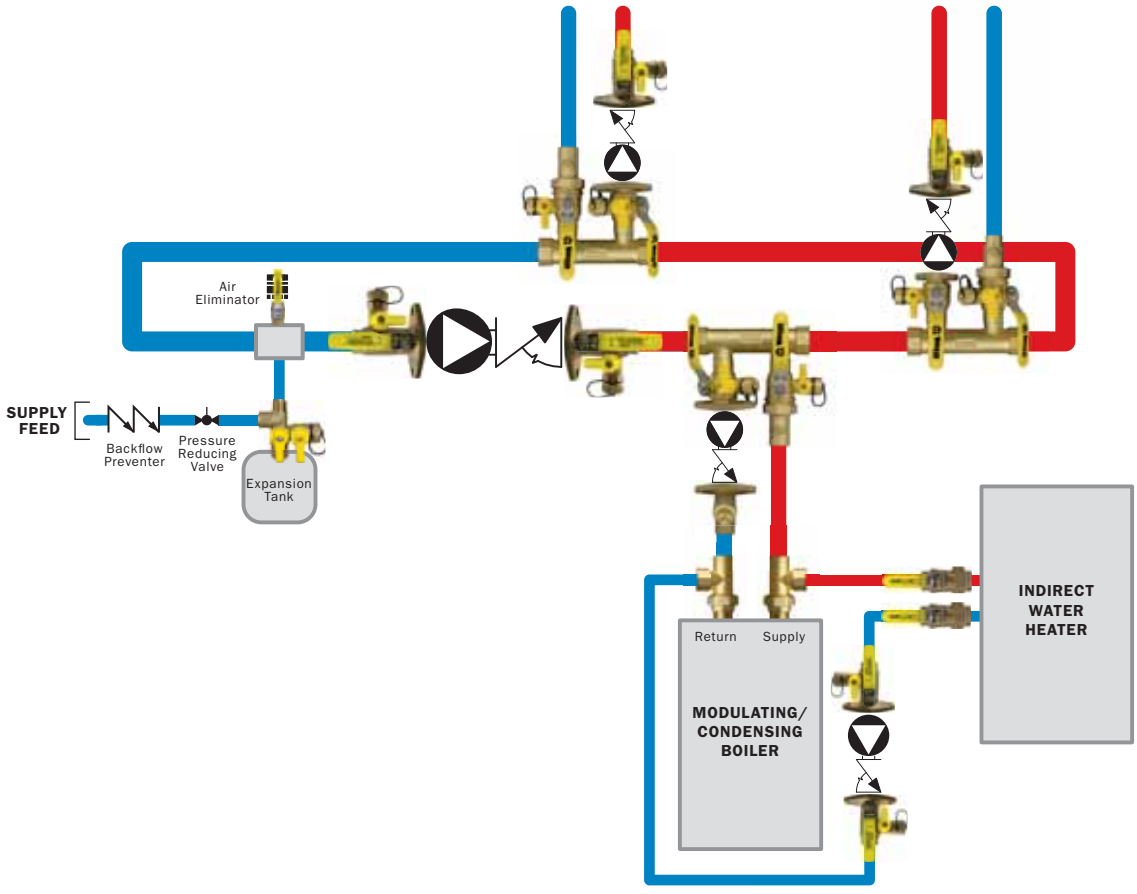

Two Boilers in Parallel

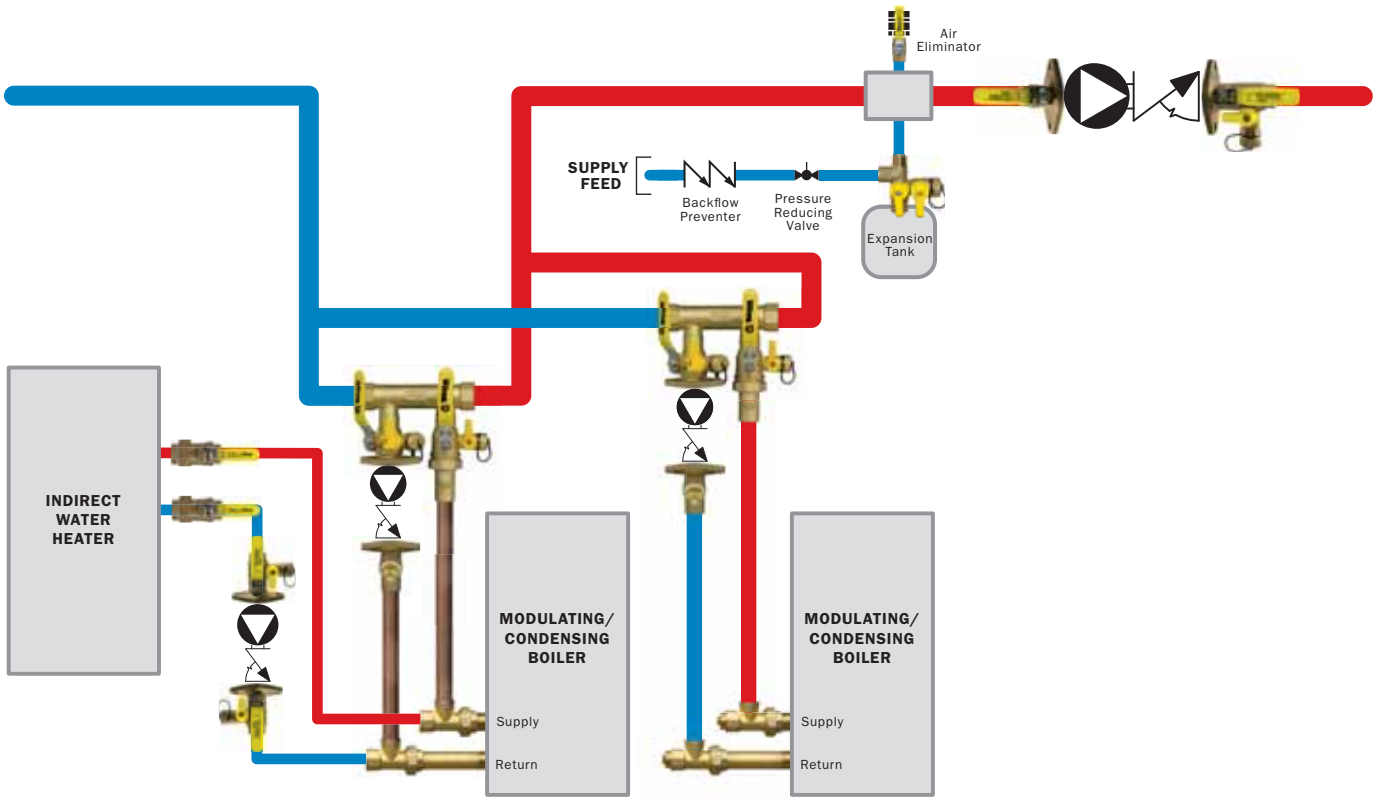

Multiple Heat Sources

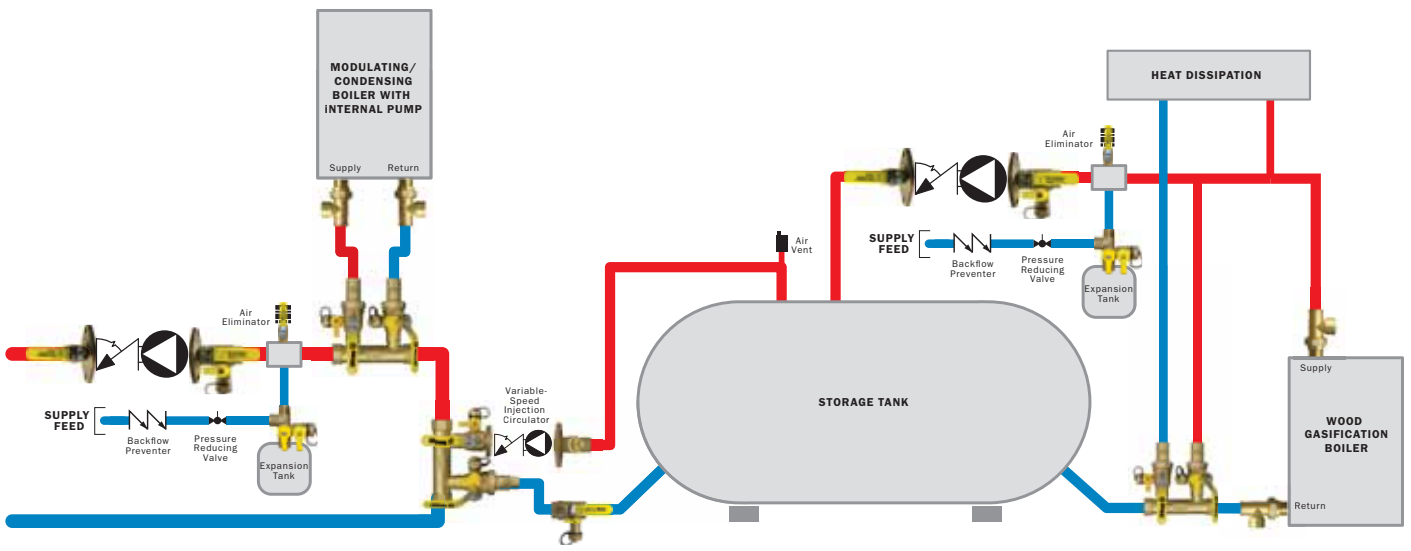

SAVE COMPONENTS, SPACE & LABOR

HYDRO-CORE™

COMPLETE NEAR BOILER PIPING KITS

- Fully fabricated & insulated supply & return lines for select floor standing & wall hung boilers
- Requires Hydro-Core Manifold (Flange Right)
- Assembled with one-piece, type-L bent copper tubing
- Plugged 1/4" pressure gauge port
- Plugged 1/2" port in strainer cap for installation of drain valve (if desired)
- Plugged FIP ports for connection to other equipment. i.e. indirect water heater, heat exchanger, pressure relief valve, etc.
- Accommodates common circulator pumps (measuring 6½" in length)

Complete Kit for Select Floor Mount Boilers

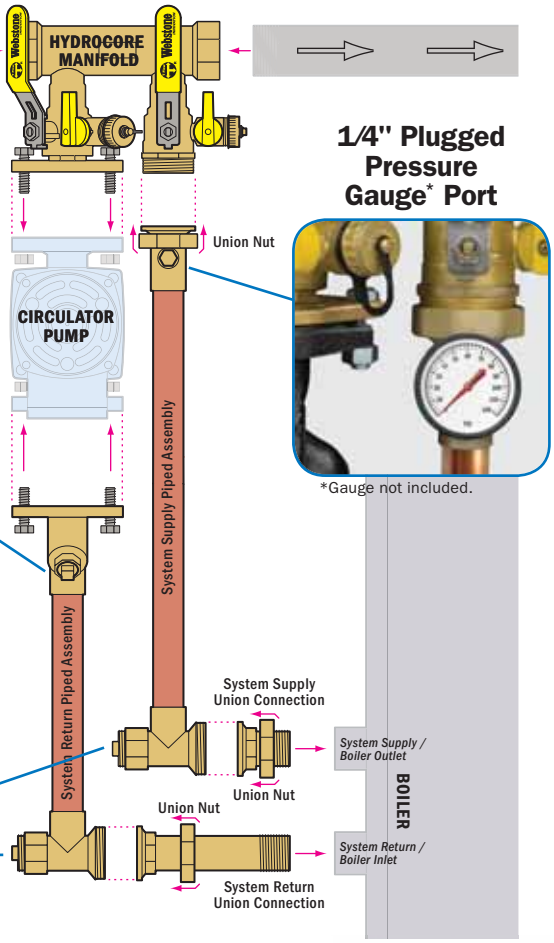

1/4" Plugged Pressure Gauge* Port

*Gauge not included.

Integrated Mesh "Y" Strainer with Rotating Flange



Plugged 1" FIP Connections to Other Equipment



Complete Near Boiler Piping Kits Include Full Foam Insulation (Floor Kit Shown)



- Replaces 28 Individual Components
- Avoids 25 Leak Paths
- Saves Nearly 4 Hours of Labor

Complete Kit for Select Wall Mount Boilers

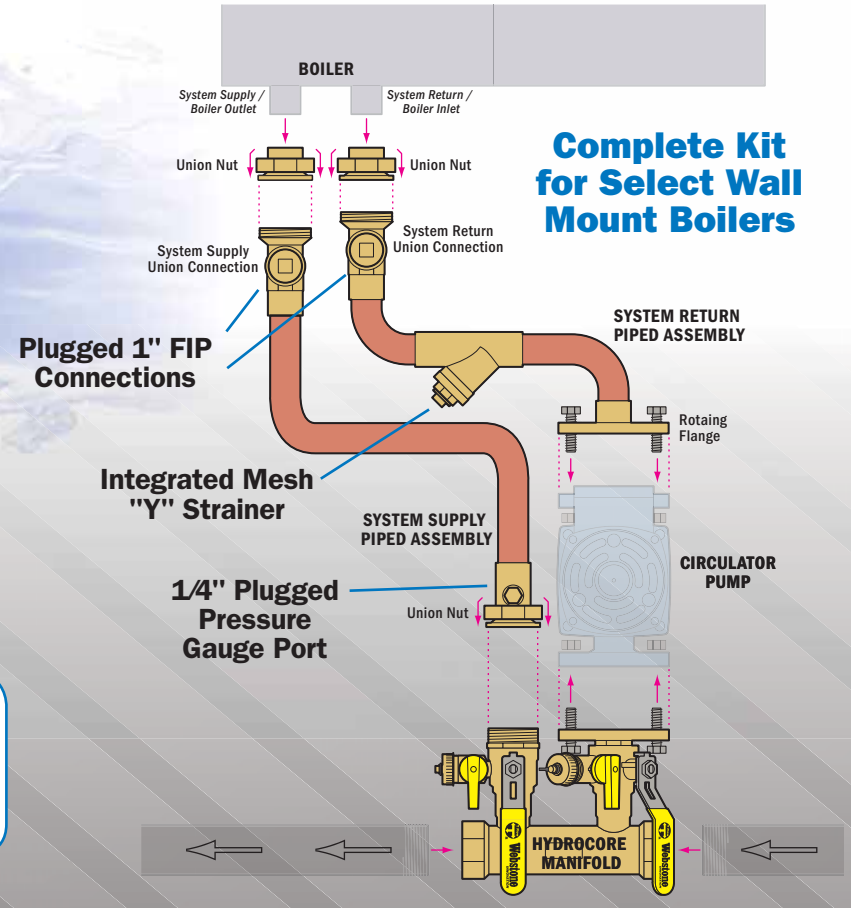

Webstone
VALVE INNOVATION

HYDRO-CORE™ FLEX

COMPLETE NEAR BOILER PIPING KITS
for Wall Hung Boilers with Integral Pumps

SIMPLE...EASY...BRILLIANT

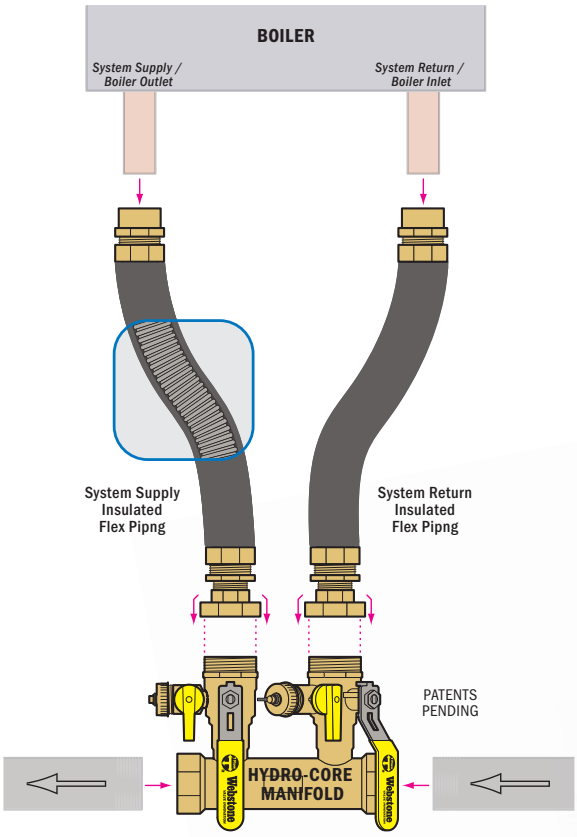

Applications

- Simplifies boiler installation
- Provides precise spacing for hydraulic separation
- Simplifies system purging
- Simplifies boiler purging, filling and descaling

Features

- Insulated supply and return lines fabricated w/ connections for your specific boiler
- Assembled with ***FLEXIBLE*** stainless steel tubing
- Tubing may be cut for installations in close quarters, longer lines are available upon request
- Includes fully insulated Hydro-Core Double Ball Drain Manifold
- Guaranteed for life

REPLACES 17 COMPONENTS

ELIMINATES 14 LEAK PATHS

SAVES 2 HOURS OF LABOR

PLUS IMMEASURABLE SAVINGS WHEN TIGHT ON TIME OR SPACE

INSULATED FLEX PIPING



- Stainless steel 304 tubing (ASTM A 240)
- High density EPDM insulation
- Connects directly to the Hydro-Core Manifold
- Choice of female, male, or SWT connections to the boiler (see compatibly chart on the reverse)

	3/4"	1"
Inner Diameter	0.83"	1.03"
Min Bend	3"	3"
Straight Length w/Fittings	14"	14"
Operating Temperature	300°	300°
Max Working Pressure	176 PSI	147 PSI

Mod/Con Boiler w/Integral Pump

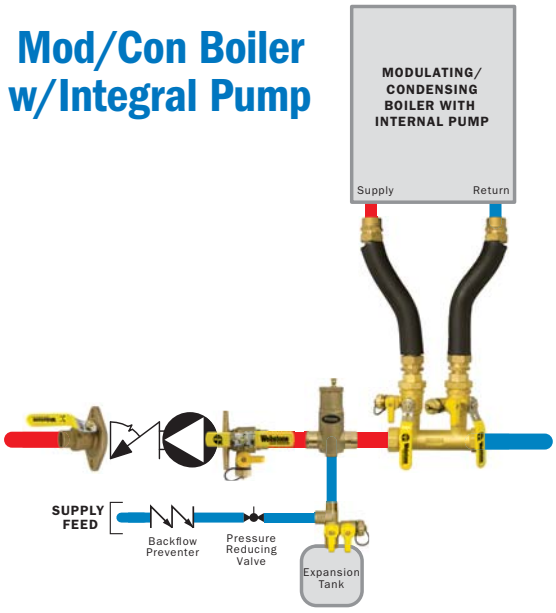

HYDRO-CORE™ DOUBLE BALL DRAIN MANIFOLD

Fully Insulated Body



- 1 1/4" run × 1" valve brass manifold
- Available in SWT or IPS
- T-flow feature on both main valves
- 2 Independent purge valves
- 1" MIP connections to flex pipe assemblies

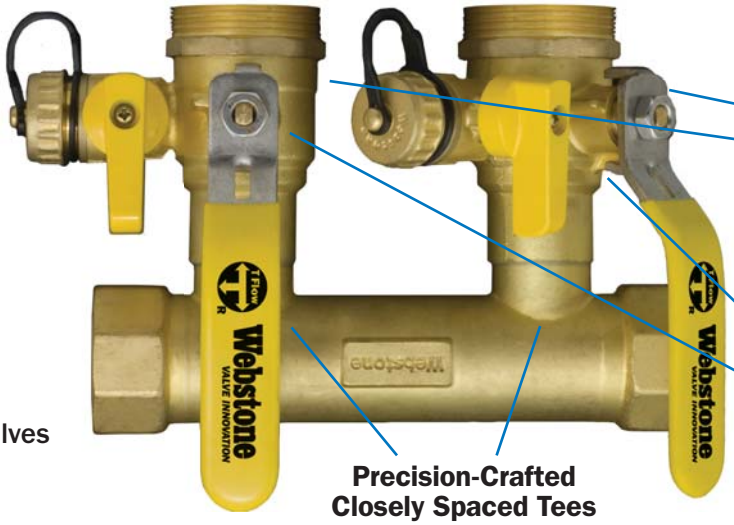

Precision-Crafted Closely Spaced Tees

Webstone Ball Drain™



T Flow R ADJUSTABLE

Divert fluids from the main flow channel into the drain from either side of the ball

FLEX KIT PART NUMBERS

IPS MANIFOLD	SWT MANIFOLD		MANUFACTURER	MODEL	NUMBER
4FK3-WIF	5FK3-WIF	Flex Complete Kit w/ 3/4" Female Boiler Connections	Raypak	Xpak	Xpak-120
					Xpak-85
4FK4-WIF	5FK4-WIF	Flex Complete Kit w/ 1" Female Boiler Connections	Bosch	GreenStar 57	ZBR16-3A
				GreenStar 100	ZBR28-3A
				GreenStar 131	ZBR35-3A
				GreenStar 151	ZBR42-3A
				GreenStar Combi 100	ZWB28-3A
				GreenStar Combi 151	ZWB42-3A
			New York Thermal NTI	Trinity Tx	Tx132C/151C
			Sime	Planet Dewy	60 BFR
4FK3-WIS	5FK3-WIS	Flex Complete Kit w/ 3/4" SWT Boiler Connections	Baxi	Luna	HT 380
					HT 1.33
				Luna 3	Comfort 310
					Comfort 1.31
			Biasi	Riva Compact	M130.30CR
				Riva Combi	M35.30CB
				Riva Plus Combi	M135.30CM
				Riva Plus Compact	M135.30CR
			Crown Boiler	Maui	MWC116E*L
				Maui Combi	MWC116E*T
			Laars	Mascot II	LMH
			Peerless	Combi	Combi 160
			Pensotti	Solenne	PCC 34
					PCH 18
					PCH 34B
					PCH 50B
					PCI 18/8
					PCI 34/20
			Sime	Format Zip	35-BF
				Planet Dewy	30/50 BF
			Slant Fin	VSL	VSL-160C
4FK4-TTS	5FK4-TTS	Flex Complete Kit w/ 1" FIP Boiler Connections	Triangle Tube	Prestige Excellence	PTE 110
					PTE 110 LP
				Prestige Solo	110

Webstone VALVE INNOVATION

ONE APPIAN WAY WORCESTER, MA 01610
P.O. BOX 59 WORCESTER, MA 01613
P: (800) 225-9529 · **F:** (800) 336-5133
www.webstonevalves.com

This content has been provided for the express purpose of demonstrating a product's function in a system and should not be used as a reference for designing or assembling any working installation. The user is solely responsible for ensuring that all products are used and all systems are designed in accordance with all applicable federal, state and local codes.

© 2013 Webstone Company Inc. FORM: HCF-0413

HYDRO-CORE™

NEAR BOILER COMPONENT KITS

For Floor Standing Boilers with Side Mount Connections

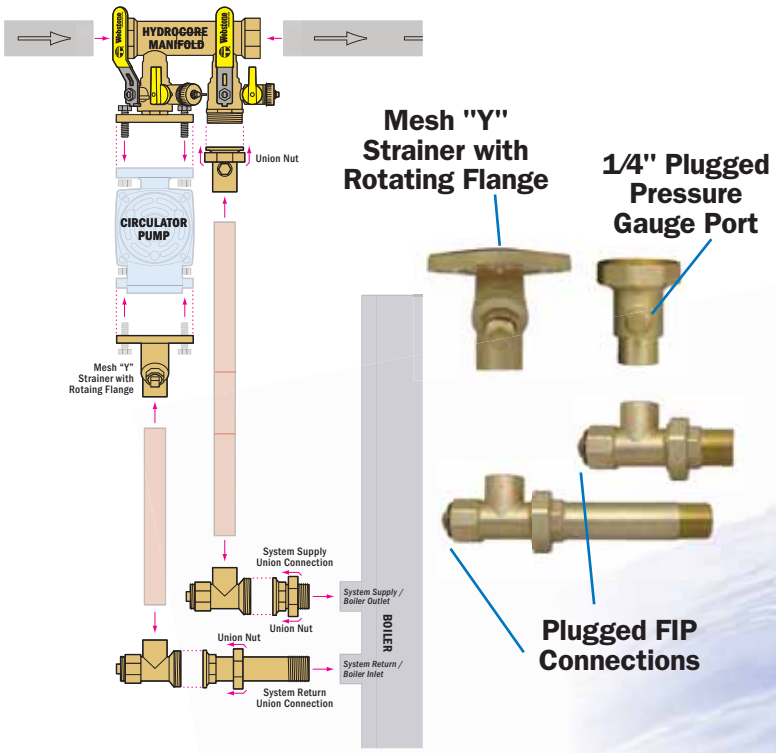

- Sets of components required for field fabricating the near boiler loop
- Available for numerous boiler models
- Requires designated Hydro-Core Manifold
- Plugged 1/4" pressure gauge port
- Plugged 1/2" port in strainer cap for installation of drain valve (floor standing kits only)
- Plugged FIP ports for connection to other equipment. i.e. indirect water heater, heat exchanger, pressure relief valve, etc.

Each kit includes:

(2) Boiler Connection Fittings

(1) Rotating Flange or Rotating Flange w/ "Y" Strainer

(1) Hydro-Core Union Connection w/ Plugged Gauge Port

For Floor Standing Boilers with Top Connections

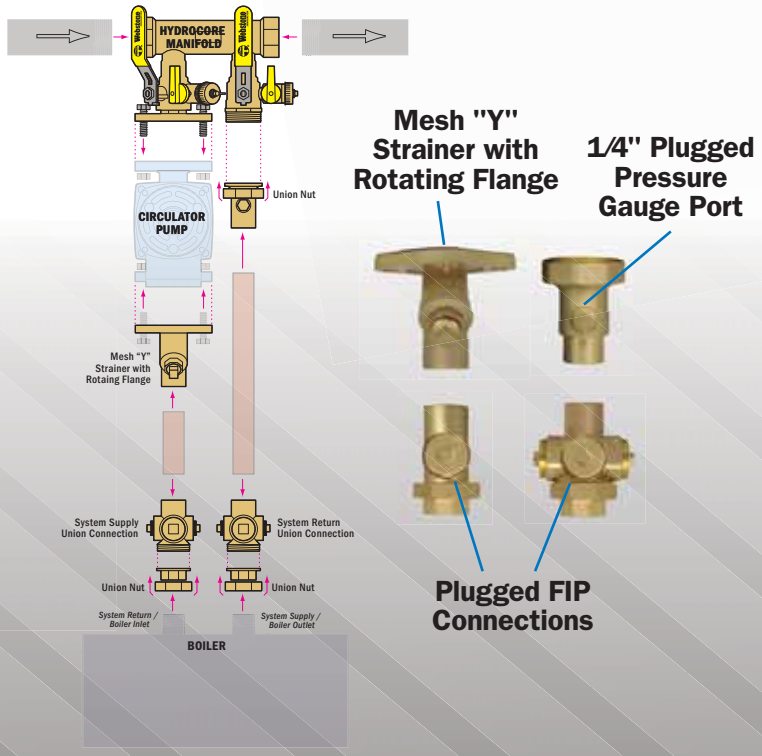

For Wall Hung Boilers

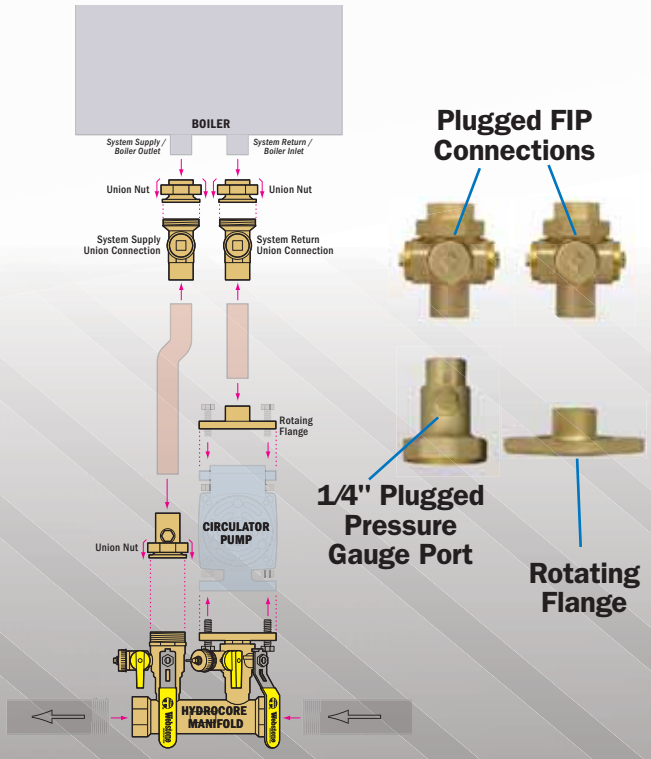

SEE BOILER COMPATIBILITY CHART TO FIT YOUR PARTICULAR BOILER

HYDRO-CORE MANIFOLDS
600 WOG

Manifold Type	Hydro-Core End Size	Run Connection	Run Size	Valve Size	Ctn/ Case	Part #
Flange Right *Requires (1) Hydro-Core Union Connection*	1" UNION CONNECTION	FIP	1¼"	1"	1/6	48754-0
			1½"	1"	1/6	48764-0
		SWT	1"	1"	1/6	58744-0
			1¼"	1"	1/6	58754-0
			1½"	1"	1/6	58764-0
			2"	1"	1/4	58774-0
	1¼" UNION CONNECTION	FIP	1¼"	1¼"	1/6	48755-0
			1½"	1¼"	1/6	48765-0
		SWT	1¼"	1¼"	1/6	58755-0
			1½"	1¼"	1/6	58765-0
			2"	1¼"	1/4	58775-0
	1½" UNION CONNECTION	FIP	1½"	1½"	1/4	48766-0
		SWT	1½"	1½"	1/4	58766-0
			2"	1½"	1/4	58776-0
Flange Left *Requires (1) Hydro-Core Union Connection*	1" UNION CONNECTION	FIP	1¼"	1"	1/6	48854-0
			1½"	1"	1/6	48864-0
		SWT	1¼"	1"	1/6	58854-0
			1½"	1"	1/6	58864-0
	1¼" UNION CONNECTION	FIP	1¼"	1¼"	1/6	48855-0
			1½"	1¼"	1/6	48865-0
		SWT	1¼"	1¼"	1/6	58855-0
			1½"	1¼"	1/6	58865-0
Double Ball Drain *Requires (2) Hydro-Core Union Connections*	1" UNION CONNECTION	FIP	1¼"	1"	1/6	48354-0
		SWT	1¼"	1"	1/6	58354-0

MANIFOLDS REQUIRE HYDRO-CORE UNION CONNECTIONS

HYDRO-CORE UNION CONNECTIONS

Component Type	Hydro-Core End Size	Tailpiece Connection	Tailpiece Size	Ctn/Case	Part #
Union Connection	1" UNION CONNECTION	FIP	¾"	6/24	HCE4-43
			1"	6/24	HCE4-44
		SWT	¾"	6/24	HCE4-53
			1"	6/24	HCE4-54
	1¼" UNION CONNECTION	FIP	1"	6/24	HCE5-44
			1¼"	6/24	HCE5-45
		SWT	1"	6/24	HCE5-54
			1¼"	6/24	HCE5-55
	1½" UNION CONNECTION	SWT	1½	4/24	HCE6-56
Union Connection w/ 1/4" NPT Gauge Port (Plugged)	1" UNION CONNECTION	FIP	¾"	6/24	HCE4-63
			1"	6/24	HCE4-64
		SWT	¾"	6/24	HCE4-73
			1"	6/24	HCE4-74
	1¼" UNION CONNECTION	FIP	1"	6/24	HCE5-64
			1¼"	6/24	HCE5-65
		SWT	1"	6/24	HCE5-74
			1¼	6/24	HCE5-75
Union Connection w/ Multiple Device Ports *Plugged Connections for (2) 3/4" devices or (1) 3/4" device & (1) 1/4" Pressure Gauge*	1" UNION CONNECTION	SWT	1"	6/24	HCE4-94

HYDRO-CORE PUMP CONNECTIONS

Component Type	Connection	Size	Ctn/Case	Part #
Rotating Flange	SWT	1"	6/24	RF4-54
		1¼"	6/24	RF5-55
Rotating Flange w/ "Y" Strainer	SWT	1"	6/24	FSTR4-54
		1¼"	6/24	FSTR5-55

HYDRO-CORE COMPLETE NEAR BOILER PIPING KITS
Fully Fabricated Supply & Return Lines

REQUIRES MANIFOLD • INCLUDES UNION CONNECTION

Boiler Type	Hydro-Core End Size	Connection to Boiler	Ctn/ Case	Custom Fit For	Part #
Floor Mount	1" UNION CONNECTION	1" MIP	1/6	Burnham ALP080/ Lochinvar KBN080	NBP4-080
			1/6	Burnham ALP105/ Lochinvar KBN105	NBP4-105
			1/6	Burnham ALP150/ Lochinvar KBN150	NBP4-150
			1/6	Burnham ALP210/ Lochinvar KBN210	NBP4-210
Wall Hung	1" UNION CONNECTION	1" SWT	1/6	Lochinvar WBN050/080/ 105/150/210	NBP4-WBN
			1/6	Lochinvar WHN055/085/ 110/155	NBP4-WHN

HYDRO-CORE NEAR BOILER COMPONENT KITS
See Boiler Compatibility Chart To Fit Your Particular Boiler

REQUIRES MANIFOLD • INCLUDES UNION CONNECTION

Boiler / Kit Type	Hydro-Core End Size	Tailpiece Connection	Ctn/Case	Part #
Floor Standing / Side Mount Kit 1	1" UNION CONNECTION	1" FIP	1/6	FS-144
		1" MIP	1/6	FS-184
	1¼" UNION CONNECTION	1¼" FIP	1/6	FS-145
		1¼" MIP	1/6	FS-185
Floor Standing / Side Mount Kit 2	1¼" UNION CONNECTION	1¼" FIP	1/6	FS-245
Floor Standing / Side Mount Kit 3	1¼" UNION CONNECTION	1¼" FIP	1/6	FS-345
Floor Standing / Top Mount Kit 1	1" UNION CONNECTION	1" FIP	1/6	FT-144
Floor Standing / Top Mount Kit 2	1¼" UNION CONNECTION	1¼" FIP	1/6	FT-245
		1" FIP	1/6	FT-2R45
Floor Standing / Top Mount Kit 3	1" UNION CONNECTION	1" FIP	1/6	FT-344
Wall Hung Kit 1	1" UNION CONNECTION	1" FIP	1/6	WH-144
		1" SWT	1/6	WH-154
		¾" FIP	1/6	WH-1R44
Wall Hung Kit 2	1¼" UNION CONNECTION	1¼" FIP	1/6	WH-245
		1¼" SWT	1/6	WH-255
Wall Hung Kit 3	1¼" UNION CONNECTION	1¼" FIP	1/6	WH-345

Webstone VALVE INNOVATION
ONE APPIAN WAY WORCESTER, MA 01610
P.O. BOX 59 WORCESTER, MA 01613
Phone: (800) 225-9529
Fax: (800) 336-5133
www.webstonevalves.com

HC-0711 The Isolator® is a registered trademark of Webstone Company, Inc. © 2011 Webstone Company